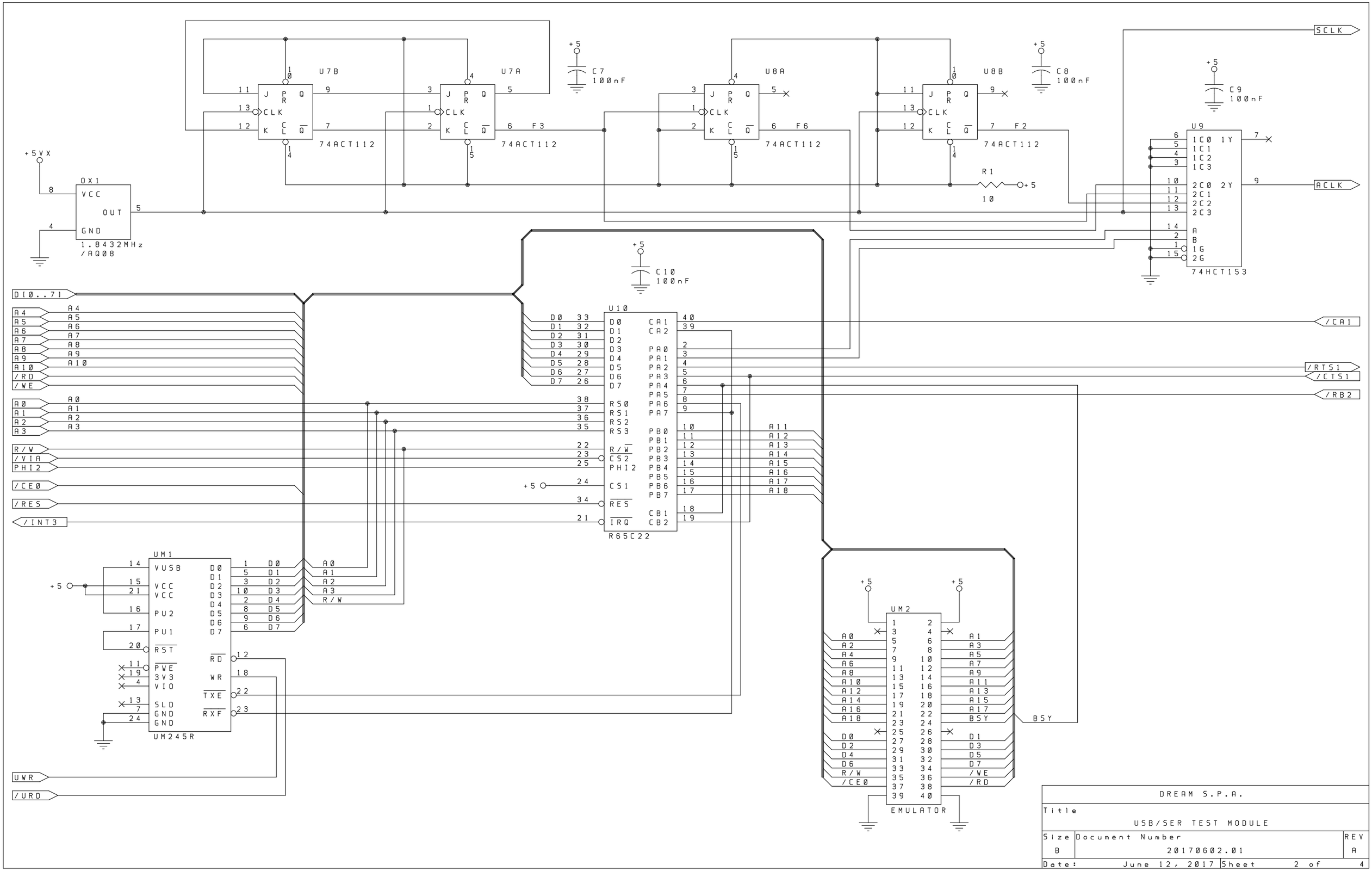
U7B
U7A
U8A
U8B
74ACT112
C7 100nF
C8 100nF
C9 100nF
C10 100nF
R1 10
+5VX
OX1
VCC
OUT
GND
1.8432MHz
/AQ08
U9
74HCT153
SCLK
ACLK
F3
F6
F2
D[0..7]
/CA1
/RTS1
/CTS1
/RB2
/INT3
U10
R65C22
UM1
UM245R
UWR
/URD
UM2
EMULATOR
BSY
DREAM S.P.A.
Title
USB/SER TEST MODULE
Size
B
Document Number
20170602.01
REV
A
Date: June 12, 2017
Sheet 2 of 4