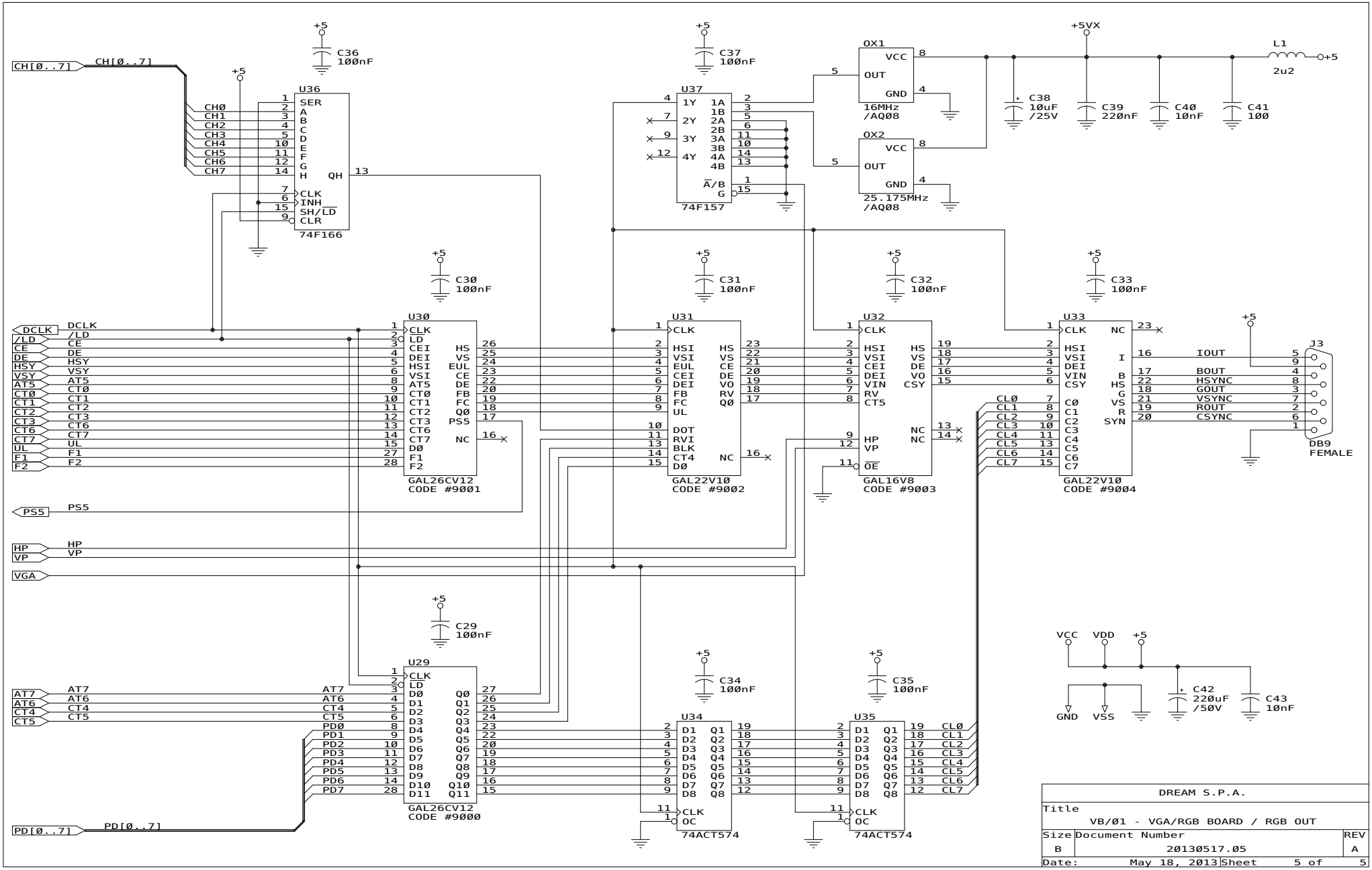
U36
74F166
U37
74F157
OX1
16MHz
/AQ08
OX2
25.175MHz
/AQ08
U30
GAL26CV12
CODE #9001
U31
GAL22V10
CODE #9002
U32
GAL16V8
CODE #9003
U33
GAL22V10
CODE #9004
J3
DB9
FEMALE
U29
GAL26CV12
CODE #9000
U34
74ACT574
U35
74ACT574
C36 100nF
C37 100nF
C38 10uF /25V
C39 220nF
C40 10nF
C41 100
L1 2u2
C30 100nF
C31 100nF
C32 100nF
C33 100nF
C29 100nF
C34 100nF
C35 100nF
C42 220uF /50V
C43 10nF
+5
+5VX
VCC
VDD
GND
VSS
CH[0..7]
DCLK
/LD
CE
DE
HSY
VSY
AT5
CT0
CT1
CT2
CT3
CT6
CT7
UL
F1
F2
PS5
HP
VP
VGA
AT7
AT6
CT4
CT5
PD[0..7]
IOUT
BOUT
HSYNC
GOUT
VSYNC
ROUT
CSYNC
DREAM S.P.A.
Title
VB/01 - VGA/RGB BOARD / RGB OUT
Size
B
Document Number
20130517.05
REV
A
Date: May 18, 2013
Sheet 5 of 5